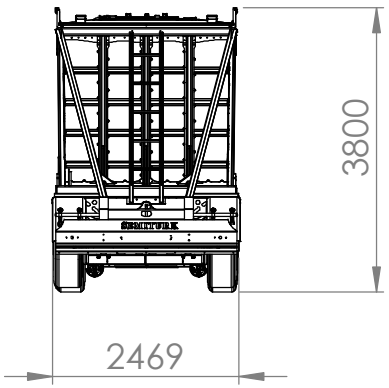

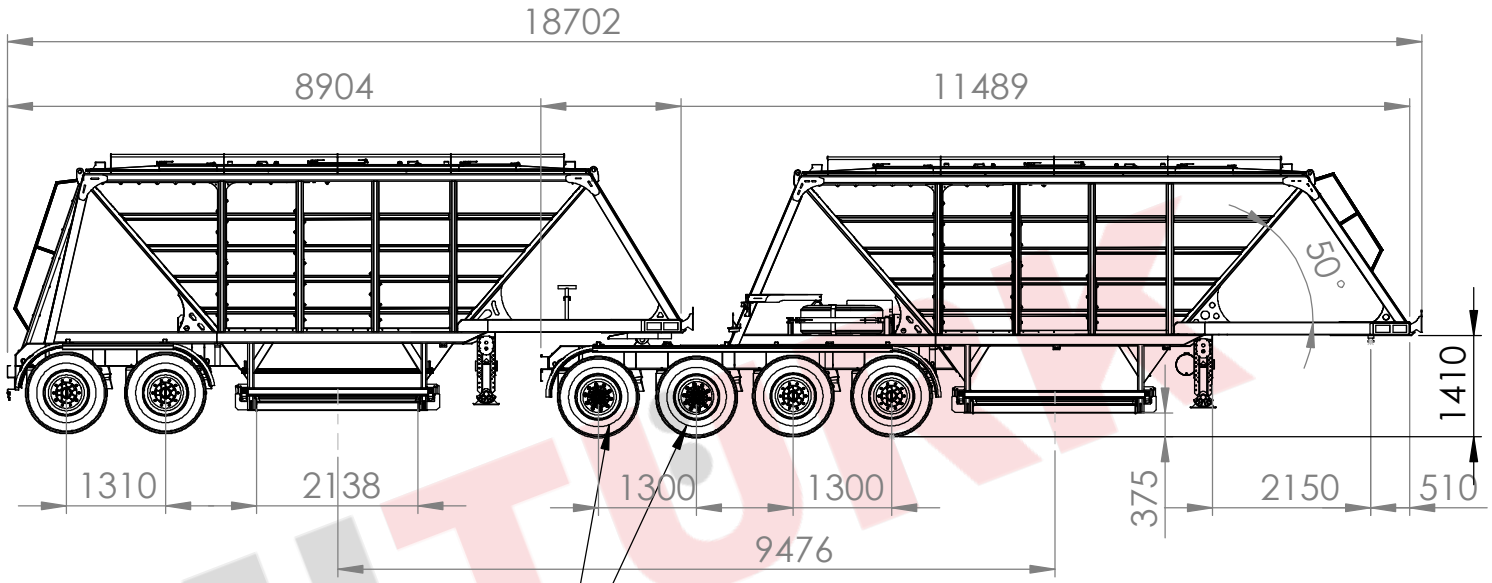

AXLES MOVİNG
(19° right and left)

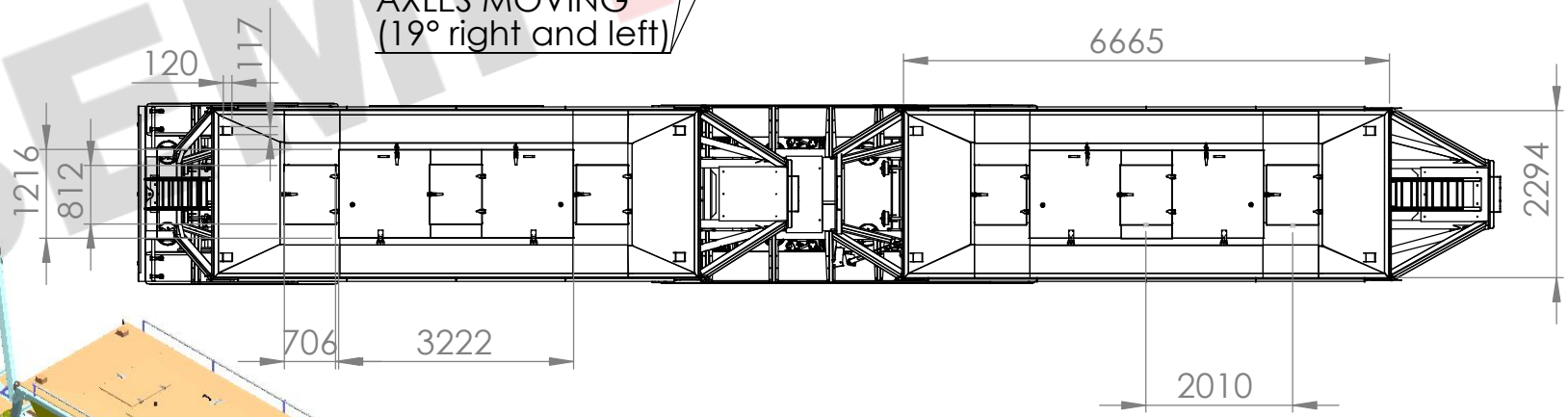

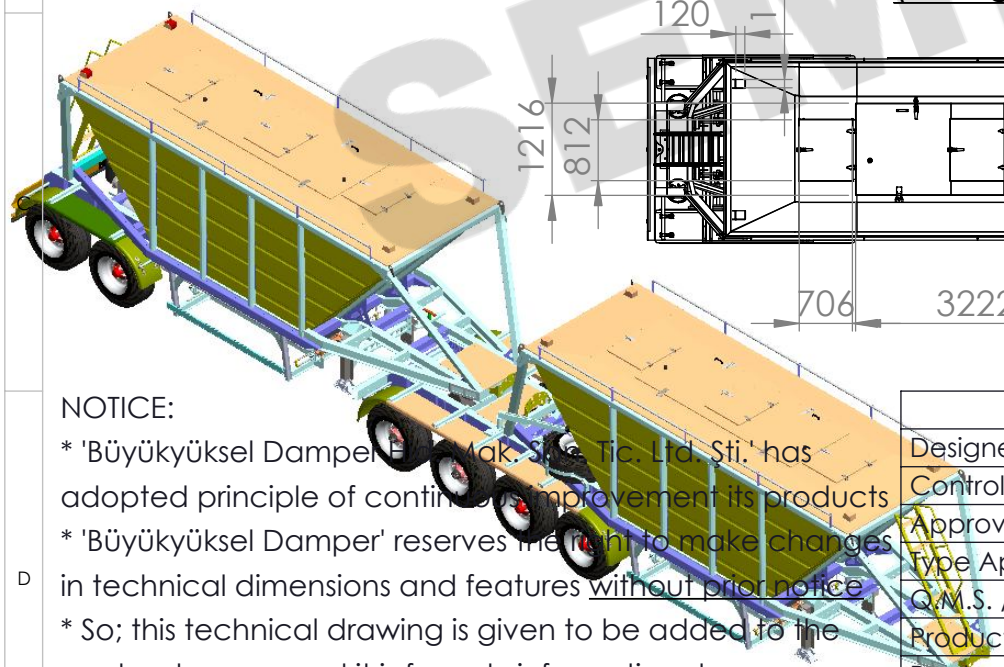

NOTICE:

* 'Büyükyüksel Damper Hid. Mak. San. Tic. Ltd. Şti.' has adopted principle of continuous improvement its products
* 'Büyükyüksel Damper' reserves the right to make changes in technical dimensions and features without prior notice
* So; this technical drawing is given to be added to the contract annex and it is for only informational purposes

	Name	Date & Signature
Designer	A.TAŞDELEN	
Control	A.ADIYAMAN	
Approval	O.ADIYAMAN	
Type Approval	e5*2018/858*00075*00	
Q.M.S. / No.	ISO 9001:2015 / QMS-0104558	
Product Code	STHT51AG10	
Product Name	Double Bottom Dump Hopper Trailers	

BÜYÜKYÜKSEL
DAMPER HİD. MAK. SAN. TİC. LTD. ŞTİ.

Trademark Name: SEMITÜRK

www.yukseldamper.com.tr
www.semiturk.com.tr
info@yukseldamper.com.tr
+90 530 610 1432 / +90 332 239 1860

All rights of this picture belong to BÜYÜKYÜKSEL DAMPER LTD. STI. So, it can not be reproduced, copied and published without permission

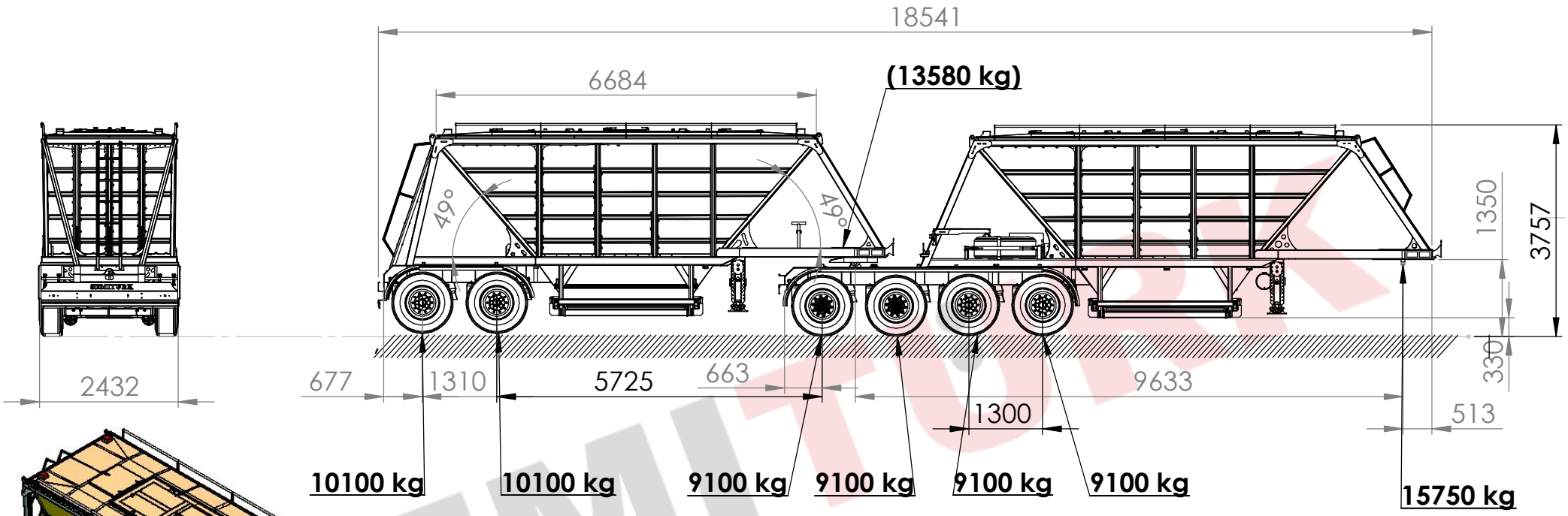

TOTAL DRY WEIGHT : 12500 kg ± %4
TOTAL LOADED WEIGHT : 72350 kg

NOTICE:
* 'Büyükyüksel Damper Hid. Mak. San. Tic. Ltd. Şti.' adopted principle of continuous improvement its products
* 'Büyükyüksel Damper' reserves the right to make changes in technical dimensions and features without prior notice
* So; this technical drawing is given to be added to the contract annex and it is for only informational purposes

	Name	Date & Signature
Designer	A.TAŞDELEN	
	A.ADIYAMAN	
Approval	O.ADIYAMAN	
Type Approval	e5*2018/858*00075*00	
Q.M.S. / No.	ISO 9001:2015 / QMS-0104558	
Product Code	STHT51AG10	
Product Name	Double Bottom Dump Hopper Trailers	

BÜYÜKYÜKSEL
DAMPER HİD. MAK. SAN. TİC. LTD. ŞTİ.

Trademark Name: SEMITÜRK

www.yukseldamper.com.tr
www.semiturk.com.tr
info@yukseldamper.com.tr
+90 530 610 1432 / +90 332 239 1860

All rights of this picture belong to BÜYÜKYÜKSEL DAMPER LTD. STI. So, it can not be reproduced, copied and published without permission

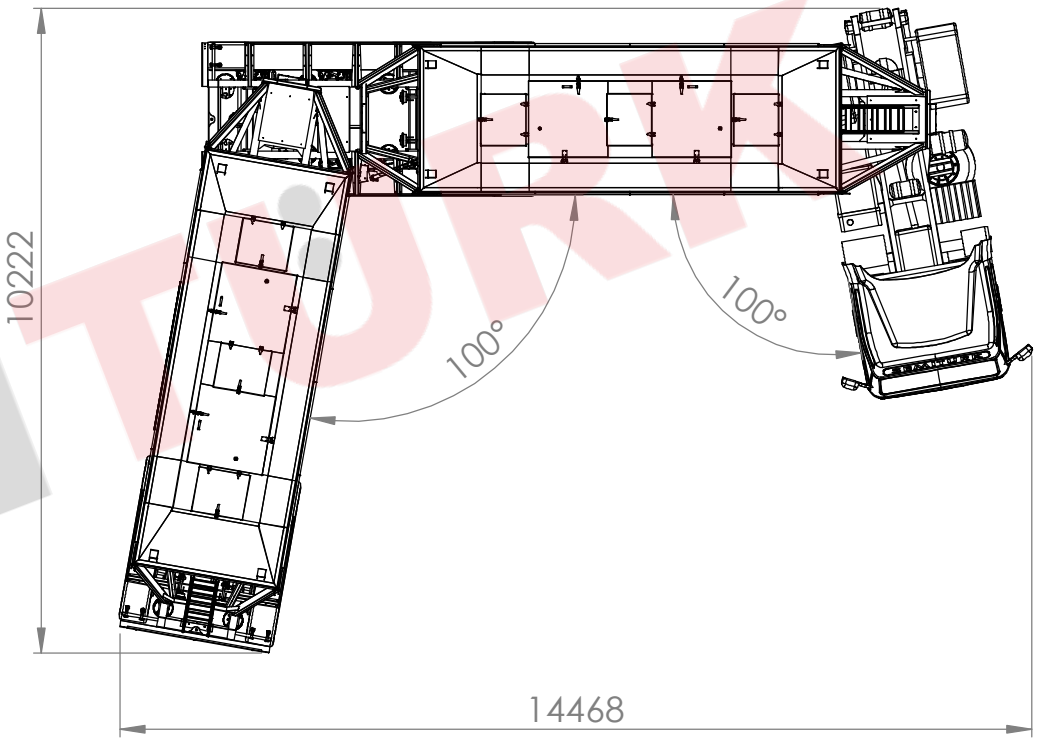

NOTICE:

* 'Büyükyüksel Damper Hid. Mak. San. Tic. Ltd. Şti.' has adopted principle of continuous improvement its products
* 'Büyükyüksel Damper' reserves the right to make changes in technical dimensions and features without prior notice
* So; this technical drawing is given to be added to the contract annex and it is for only informational purposes

	Name	Date & Signature
Designer	A.TAŞDELEN	
Control	A.ADIYAMAN	
Approval	O.ADIYAMAN	
Type Approval	e5*2018/858*00075*00	
Q.M.S. / No.	ISO 9001:2015 / QMS-0104558	
Product Code	STHT51AG10	
Product Name	Double Bottom Dump Hopper Trailers	

BÜYÜKYÜKSEL
DAMPER HİD. MAK. SAN. TİC. LTD. ŞTİ.

Trademark Name: SEMITÜRK

www.yukseldamper.com.tr
www.semiturk.com.tr
info@yukseldamper.com.tr
+90 530 610 1432 / +90 332 239 1860

All rights of this picture belong to BÜYÜKYÜKSEL DAMPER LTD. STI. So, it can not be reproduced, copied and published without permission