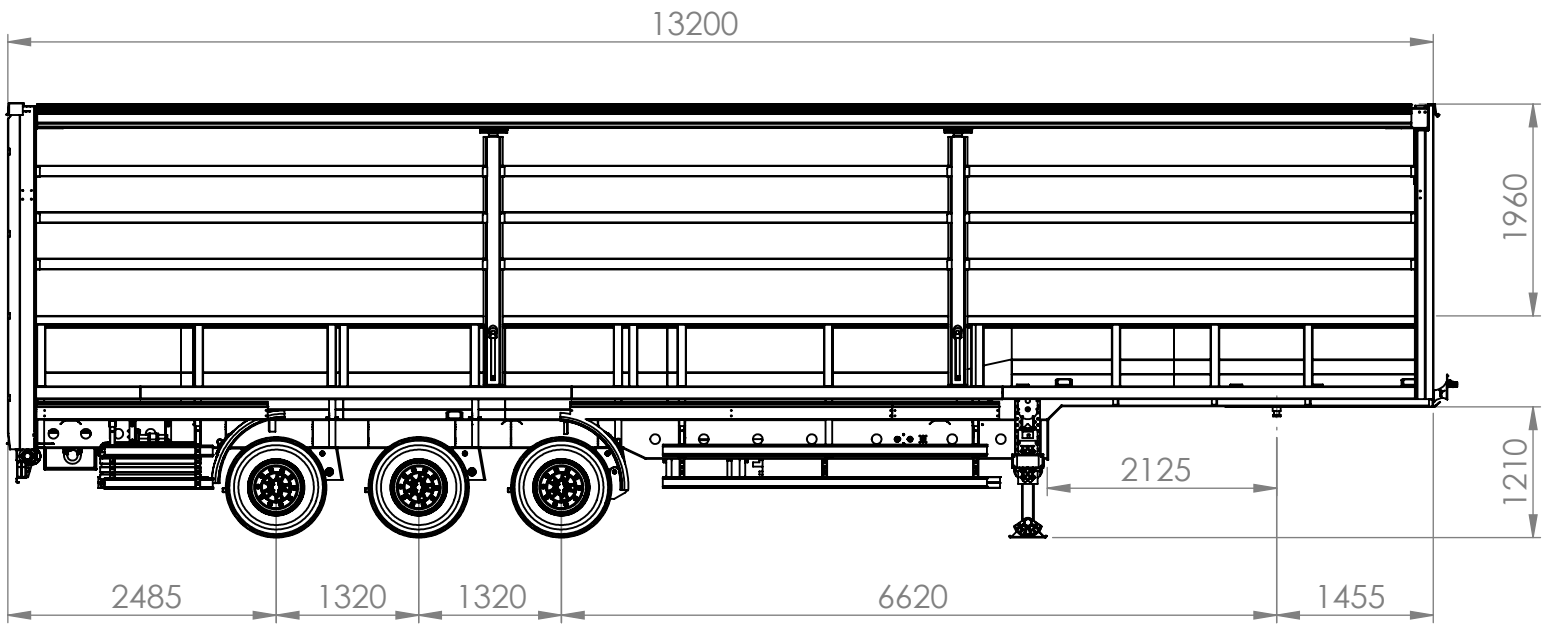

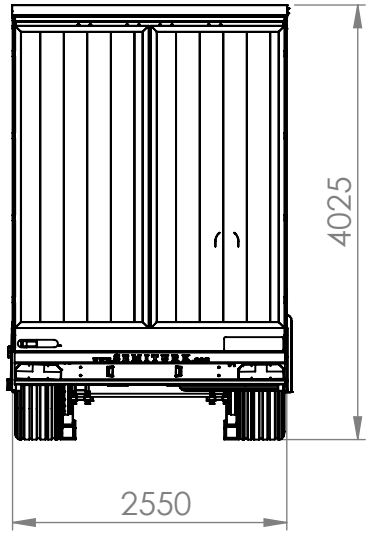

FREE TOLERATIONS (mm) TS DIN7168					CORNER RADIUS		A4	VERSION NO:
Dimensions	120-400	400-1000	1000-2000	2000-4000	INT	EXT		VERSION DATE:
Draft Tolerations	4	4	4	4	Materials :	WEIGHT:	Date:	SEMI PROD. NO:
PRODUCT CODE	STBT30AK51				Technic :	S.F.YÜKSEL		ASSEMBLY NO:
					Control:	A.ADIYAMAN		PREV DRAWING NO:
					Approve :	O.ADIYAMAN		WITH THE DRAWING REPLACES THE DRAWING
SEMITURK					ASSEMBLY NAME: GLUE CARRIER SEMI-TRAILER			PART NO:
								DRAWING NO:
								PRG. NO :
This drawing is a property of BÜYÜK *YÜKSEL DAMPER LTD. ŞTİ.* and forbidden to use or copy without written permission.								SHEET OF