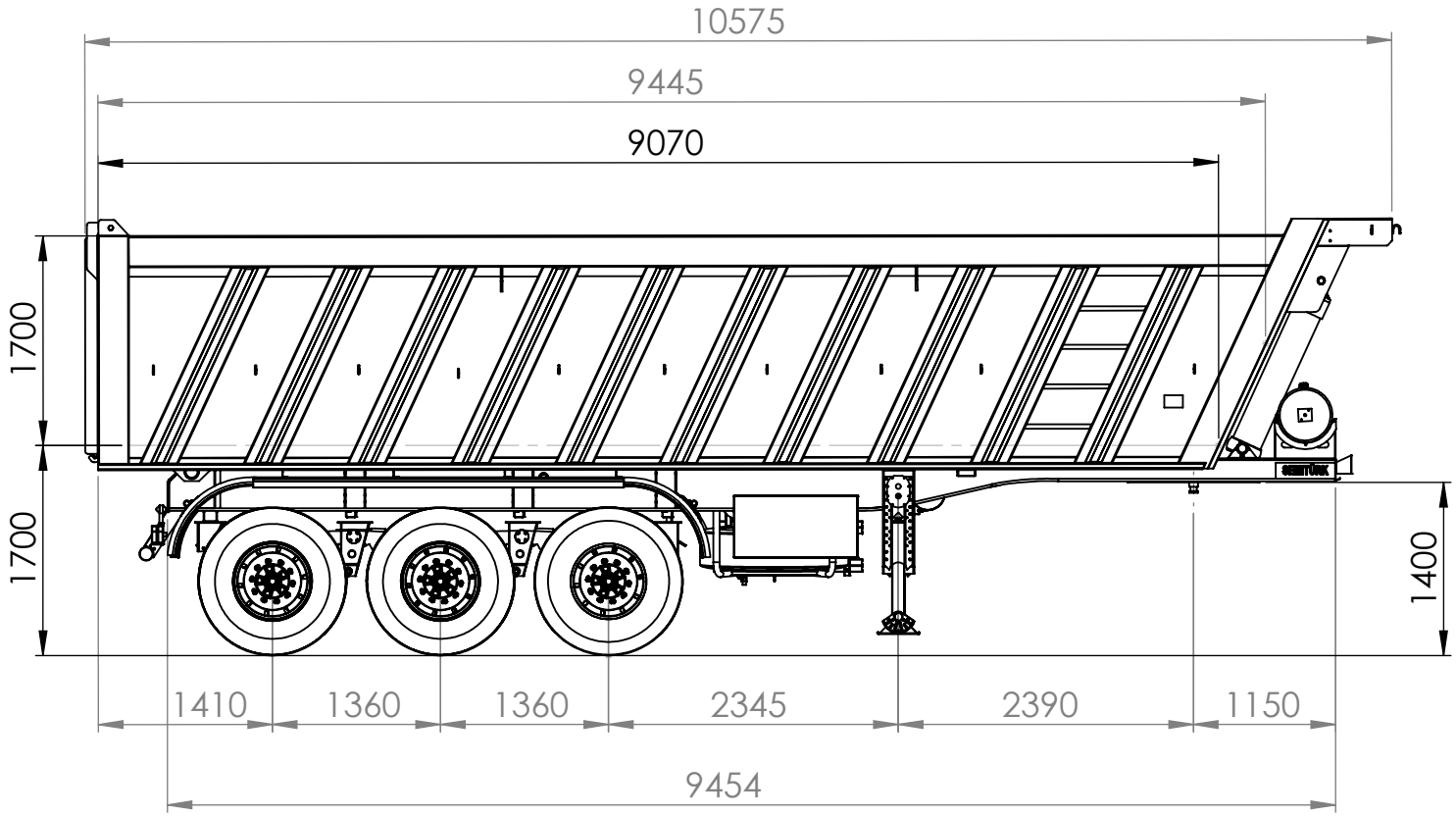

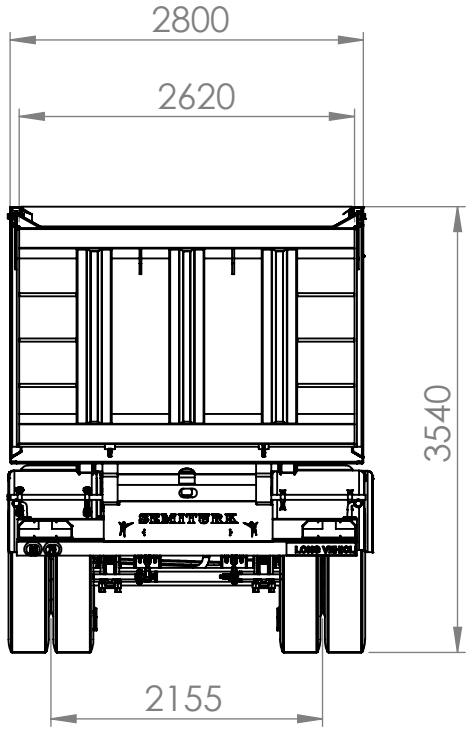

FREE TOLERATIONS (mm) TS DIN7168				
Dimensions	120-400	400-1000	1000-2000	2000-4000
Draft Tolerations	4	4	4	4

CORNER RADIUS		A4	VERSION NO:
INT	EXT		VERSION DATE:
			SEMİ PROD. NO:
Materials :	WEIGHT:	Date:	ASSEMBLY NO:
			PREV. DRAWING NO:
Technic :	S.F.YÜKSEL		QTY: / WITH THE DRAWING
Control:	A.ADIYAMAN		REPLACES THE DRAWING
Approve :	O.ADIYAMAN		

PRODUCT CODE: STET30SP20

SEMITÜRK

ASSEMBLY NAME:

43 m^3 TIPPER SEMI-TRAILER

PART NO:

DRAWING NO:

PRG. NO :

SHEET OF

This drawing is a property of BÜYÜK ***YÜKSEL DAMPER LTD. ŞTİ.*** and forbidden to use or copy without written permission.